Ω
Ω

=25 (unless otherwise specified)

=25
=100

±

=25
=25

θ /W
θ /W

=25 (unless otherwise specified)

=100

Ω

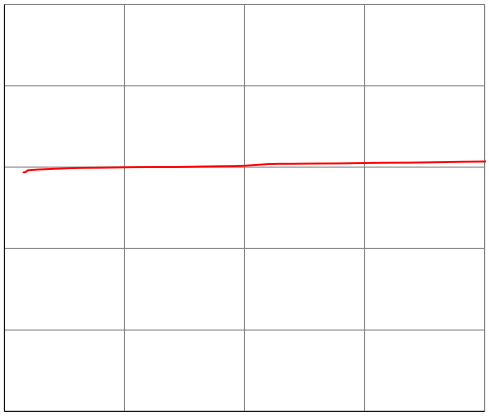	

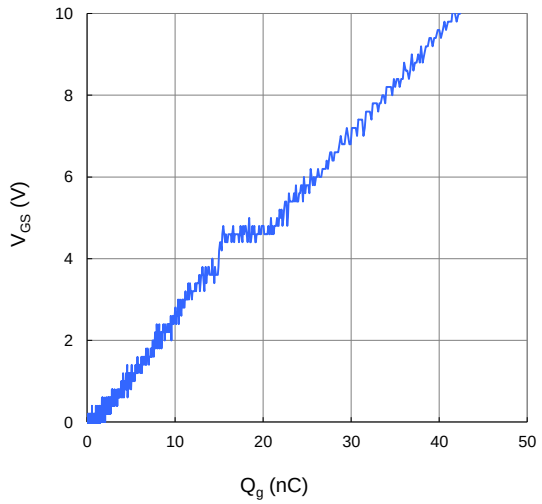
10
8
6
4
2
0
0
10
20
30
40
50
V_{GS} (V)
Q_g (nC)

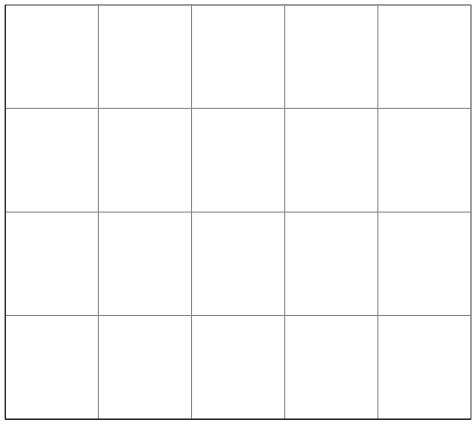



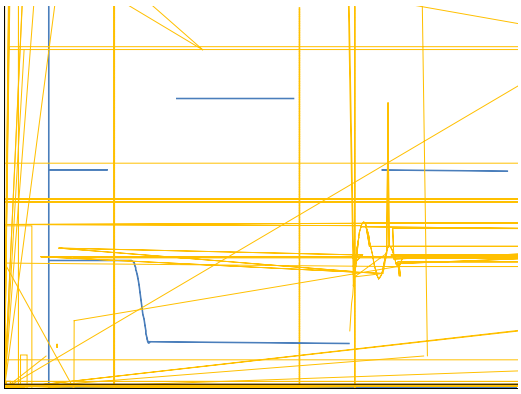

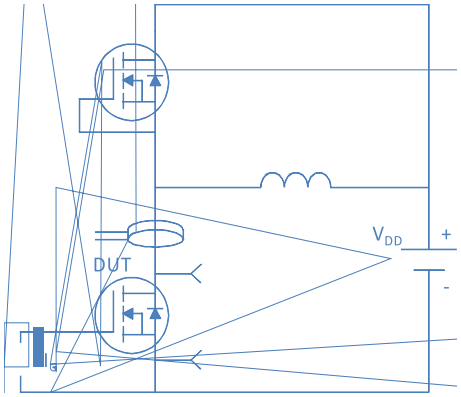
DUT
V_{DD}
+
-
G

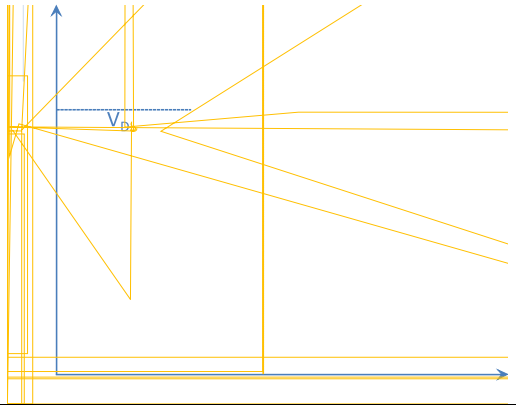
V_{DD}

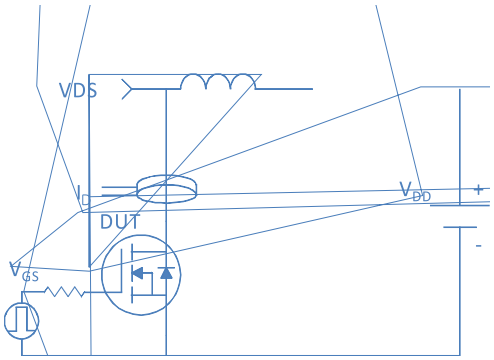
VDS
I_D
DUT
V_{GS}
V_{DD}
+
-

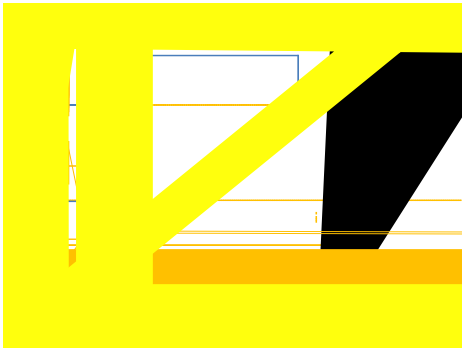



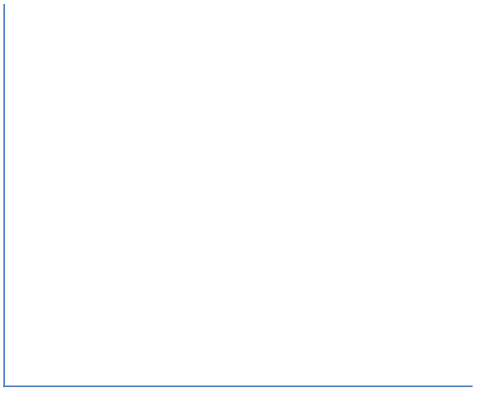

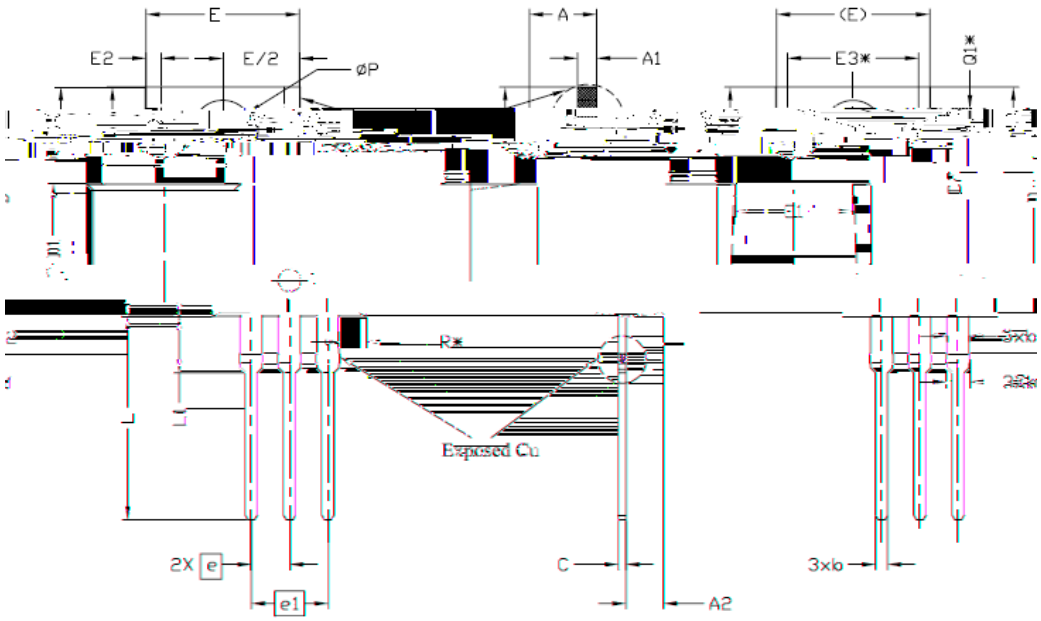

SYMBOL	DIMENSIONS			NOTES